Sound

Click on the Sound description for diagram

Natural, Lacks Bass

Natural, Well-Balanced

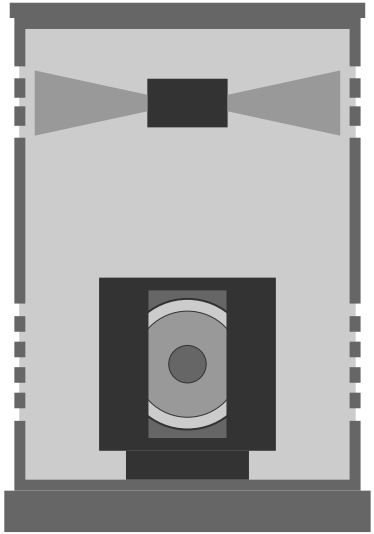

Shure Mic:
PG81, SM94, Beta91, KSM137

Placement:
Aim one microphone into top louvers, 3 inches to 1 foot away

Comments:
Good one microphone pickup

Sound

Click on the Sound description for diagram

Natural, Lacks Bass

Natural, Well-Balanced

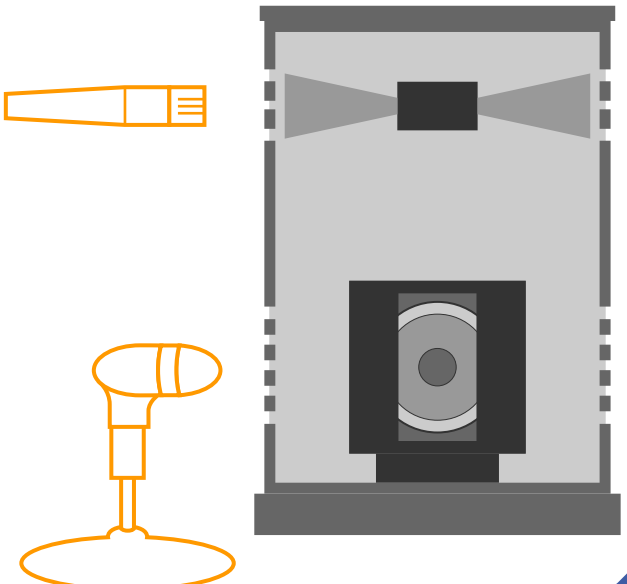

Shure Mic:
PG81, SM94, Beta91, KSM137

Placement:
Mic tops louvers and bottom bass speakers 3 inches to 1 foot away

Comments:
Excellent overall sound